光 伏 多 功 能 棚

PV-Powered Multi-functional Shed

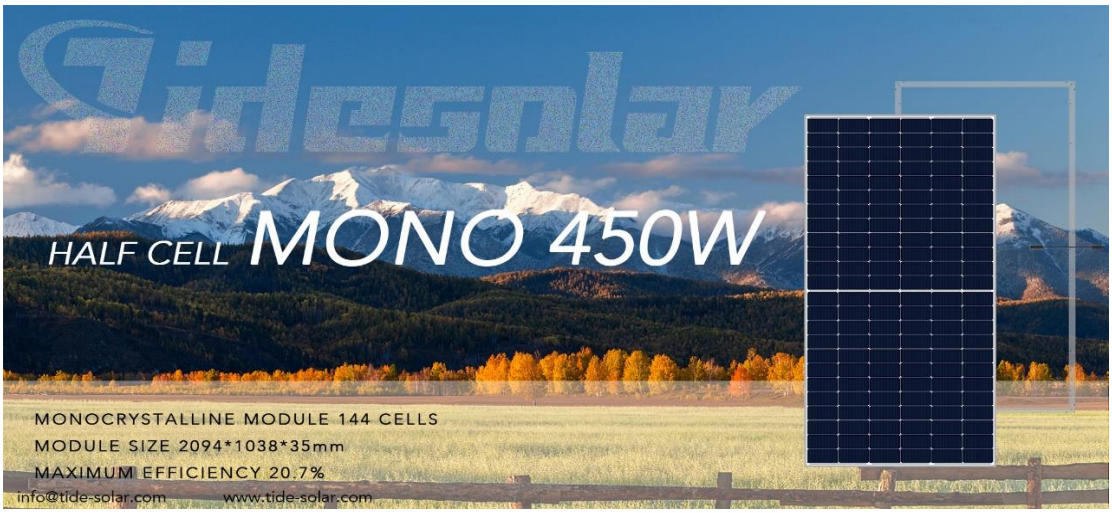

HALF CELL

430W-450W

144 CELL
MONOCRYSTALLINE MODULE

430W-450W
POWER OUTPUT RANGE

20.7%
MAXIMUM EFFICIENCY

0 to +3%
POSITIVE POWER TOLERANCE

15 YEAR PROUDUCT WARRANTY
30 YEAR LINEAR POWER WARRANTY

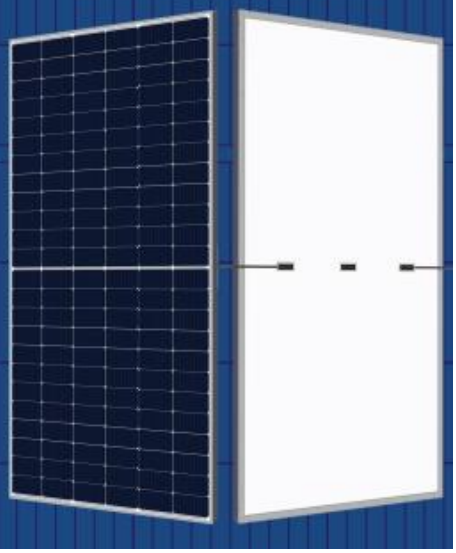

Electrical Characteristics

Component Model	TD-430MB-144HC	TD-435MB-144HC	TD-440MB-144HC	TD-445MB-144HC	TD-450MB-144HC
Maximum Power (PMP)	STC	STC	STC	STC	STC
	430	435	440	445	450
Open Circuit Voltage (VOC)	49.3	49.5	49.7	49.9	50.1
Short Circuit Current (ISC)	11.32	11.40	11.47	11.54	11.61
Maximum Power Voltage (VMP)	41.2	41.3	41.4	41.6	41.8
Maximum Power Current (IMP)	10.44	10.54	10.63	10.70	10.77
Component Efficency (η_c)	19.78	20.01	20.24	20.47	20.7
Power Tolerance			(0, +3%)		
Maximum System Voltage			1500V DC		
Maximum Rated Fuse Current			20 A		

STC: Irradiance 1000 W/m² module temperature 25 °C AM=1.5

DIMENSIONS OF PV MODULE

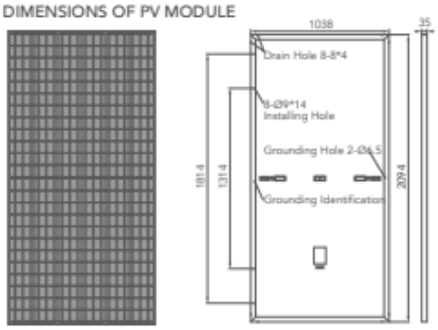

Temperature Characteristics

Maximum Power Temperature Coefficient	-0.35 % / °C
Temperature Coefficient Of Open Circuit Voltage	-0.27 % / °C
Temperature Confficient Of Short Circuit Current	+0.05 % / °C
Working Temperature	-40 ~ +85 °C
Nominal Operating Cell Temperature (NOCT)	45 ± 2 °C

I-V Curve

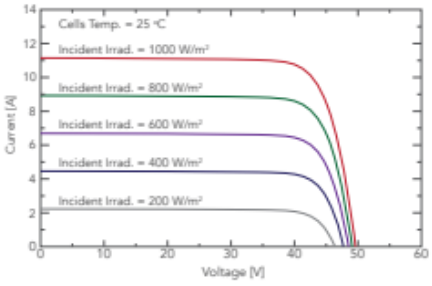

Structural Characteristics

Module Size	2094x1038x35mm
Weight	23.5kg
Battery	single crystal PERC166x83mm (144pieces)
Glass	3.2mm tempered coated glass, low iron
Frame	anodized aluminum alloy
Junction Box	IP68, 3 diodes
Output Lead	4.0mm 1200mm(+) / 1200mm(-) or customized
Mechanical Load	front 5400pa / back 2400pa

Add: Wind and Solar Industrial Park, Huishan, Wuxi, Jiangsu, China
Tel: +86-510-83885850 Email:info@tide-solar.com Website: www.tide-solar.com

系统 A （使用 8 片 450Wp 常规白背白框组件）

System A (adopting 8 pcs of 450Wp Regular White-plate/White-frame PV Modules)

（1） 规划的组件排布图 (Planned Layout of PV Modules)：

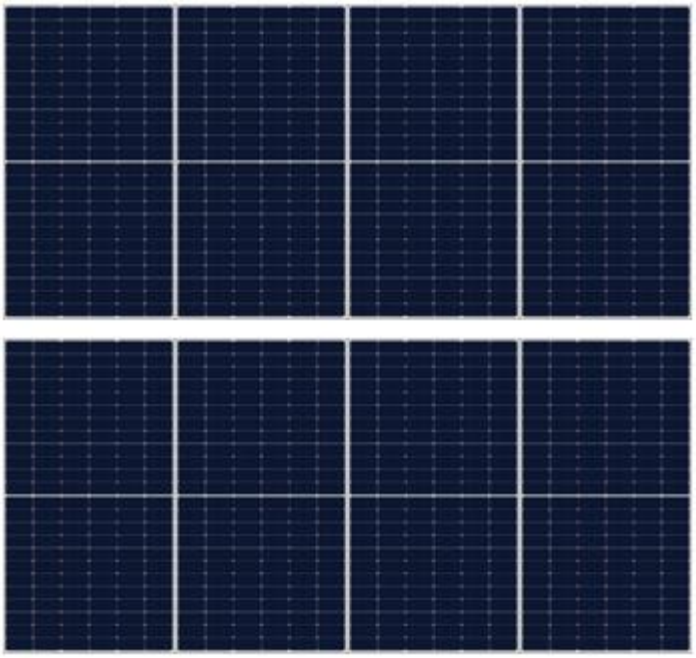

（2）适合的应用场景(Suitable Application Scenarios)：

(3) 全铝合金支撑结构的设计草图(Design Sketch of All Aluminum Alloy Support Structure):

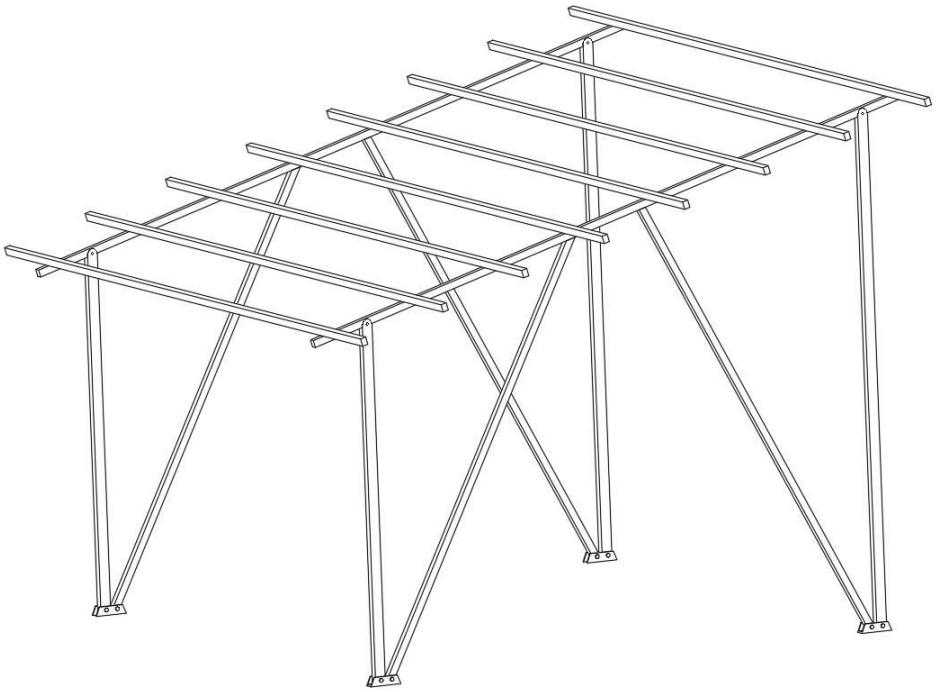

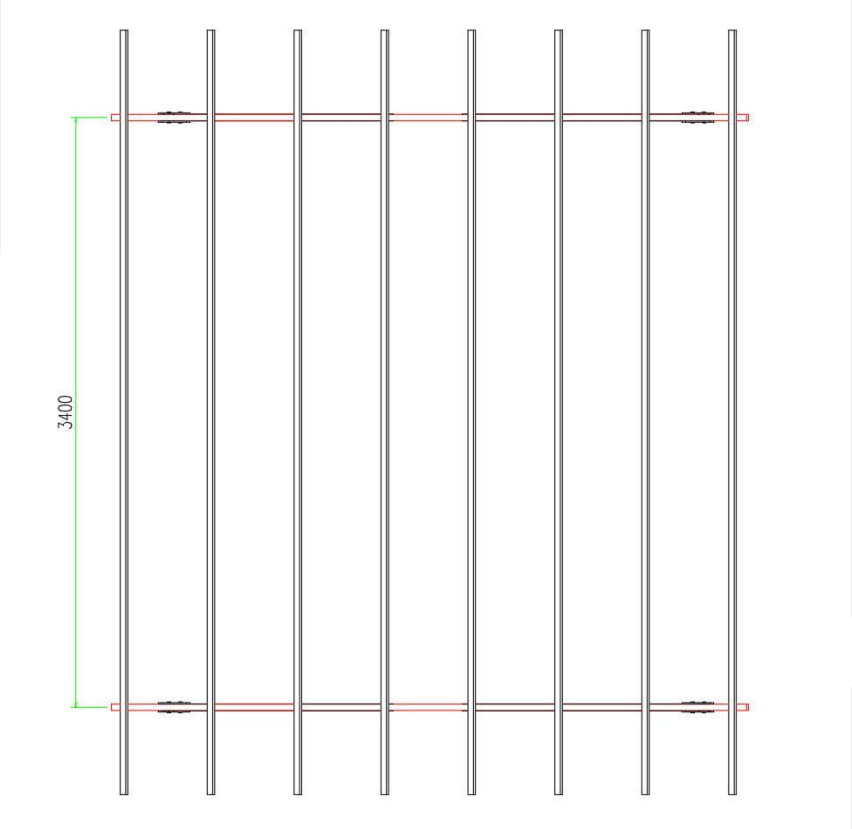

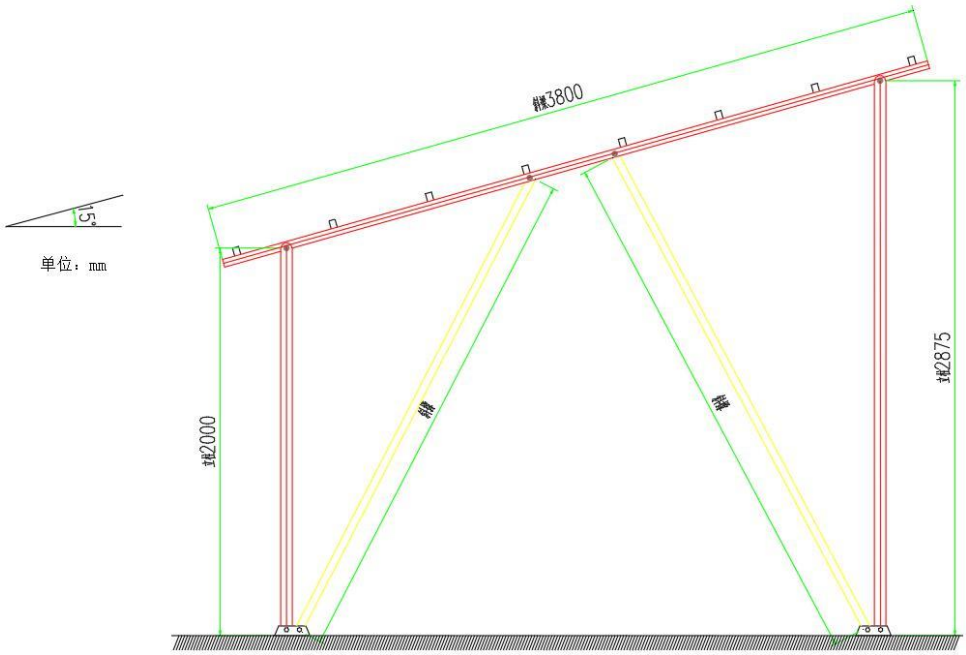

(4) 配置的系统部件详细清单及价格(Components List and Prices)：

Components	Model /Specification	Qty
单晶太阳能板 Monocrystalline Silicon PV Panel	TD-450MB-144HC	8 pcs
全铝合金支撑结构 All Aluminum Alloy Support Structure	As Tidesolar team designed;	1 set
光伏输出延展线缆 PV String DC output Extension Cable	compatible MC4 connector (latching) extension PV cable of 1*2.5mm^2, 15m length, male /female;	2 pcs
光伏侧隔离开关箱 PV-side Isolation Switching Box	W/i DC circuit breaker, DC Surge Protection Device and DC Rated Fuses; Waterproof Grade: IP65;	1 pcs
直流输出延展线缆 DC Output Extension Cable	BV/BVR 1*4mm^2, 10m length; plus one pair of MC4 Connector;	2 pcs
单相混合逆变器 Single-phase PV Hybrid Inverter	SUN-3.6K-SG03LP1-EU;	1 pcs
单相并网箱 Single Phase Gridconnected Box	Rated AC voltage 220v/230v/240v Max. rated input current: 32A Rated frequency 50hz/60hz Protection grade: IP65 Certificate: CCC /CE /Rohs	1 pcs
Grand-total Price FOB(Qingdao)	USD 2,856.80 /set	

Note:

A hybrid inverter is used in this system so that to facilitate the user, if necessary, in the later stage to easily install a energy storage battery unit.